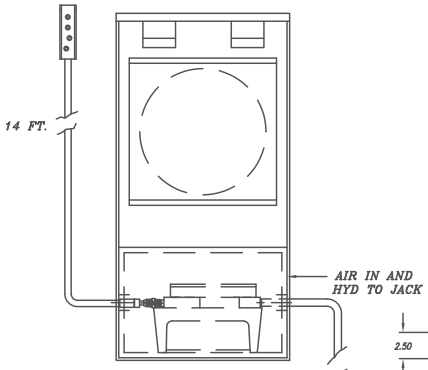

SECTION "A"–"A"

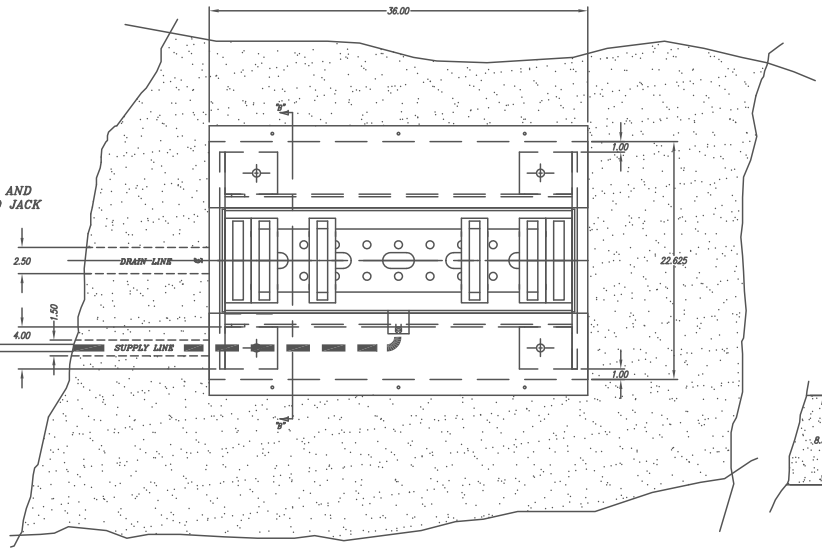

SECTION "B"–"B"

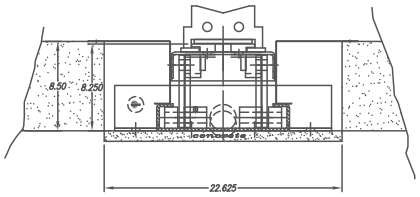

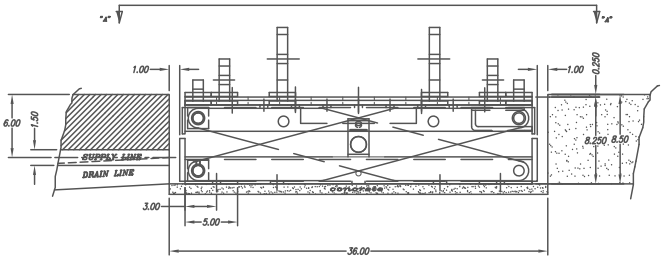

DWG. NO.	REFERENCE DWGS.

TOLERANCES

Class Of Accuracy	Nominal Dimension (INCHES) > 0.0 – 0.12	> 0.12 – 0.35	> 0.35 – 1.25	> 1.25 – 4.75	> 4.75 – 12	> 12 – 30	> 30 – 78	> 78 – 118	> 118 – 315	> 315 – 472	> 472 – 630	> 630 – 982	Use Application
Fine ±	0.002	0.002	0.004	0.006	0.008	0.012	0.020	0.030	–	–	–	–	
Medium ±	0.004	0.004	0.008	0.012	0.020	0.030	0.047	0.080	0.120	0.155	0.195	0.235	
Coarse ±	0.008	0.008	0.020	0.030	0.047	0.080	0.120	0.155	0.195	0.235	0.275	0.315	
Very Coarse ±	–	0.020	0.040	0.060	0.080	0.120	0.155	0.235	0.315	0.390	0.470	0.470	

UNLESS STATED OTHERWISE MACHINED SURFACE FINISH SHALL BE:– 125√

BILL OF MATERIAL

ITEM	QTY.	DESCRIPTION	MATERIAL	NOTE	WT.

ISSUE	BY	DESCRIPTION	CHECK	APP'VD	DATE

REVISIONS

Stan Design Inc.

TJ12 INGROUND FLUSH

DRAWN	CHECKED	ENGINEER	PROJ. ENGINEER	PROJ. MANAGER	SCALE
S.C.	B.S.				1"=6"
DATE OCT, 08	DATE	DATE	DATE	DATE	

CAD FILE NAME	THIRD ANGLE PROJECTION	DWG. No.	ISSUE
SDTJ12I		SDTJ12I	SHT 1 OF X
CAD PLOT DATE OCT, 08			